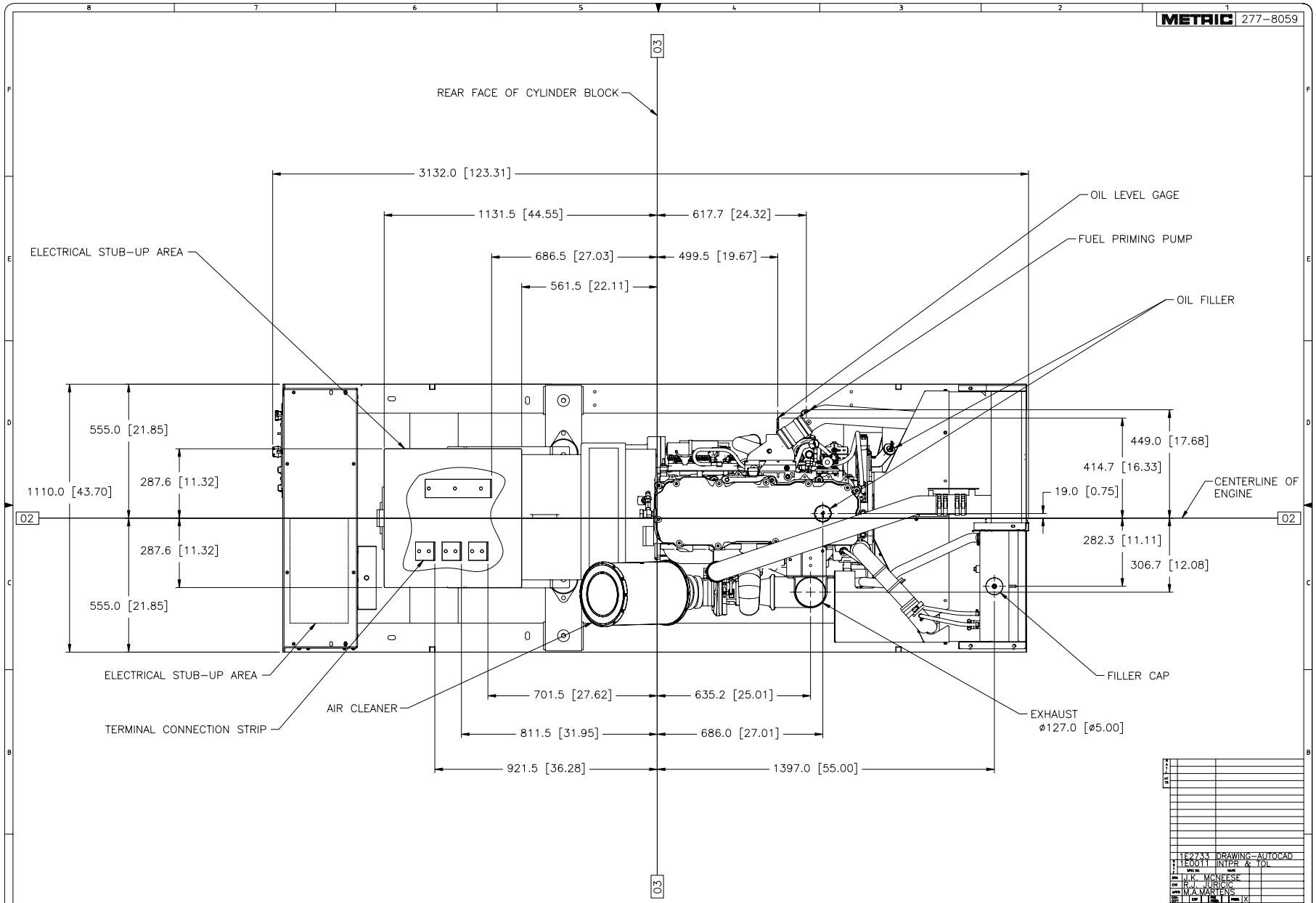

CAT C9 PACKAGE GENSET
DWG# 277-8059 CHG 06
METRIC [INCH]
TOP VIEW
DK-2065 CHG 15 SHOWN

1E2733	DRAWING-AUTOCAD	
1E0011	INTPR & TOL	
DRN	J.K. MCNEESE	
CH	R.J. JURICK	
APPD	M.A.MARTENS	
PRIMA	X	
SCALE	1 = 5	
SHEET 5 OF 6	06	16MAR09

UNLESS OTHERWISE SPECIFIED DIMENSIONS ARE IN MM [INCH] DIMENSIONS W/O TOL ARE BASIC

THIRD ANGLE PROJECTION

CATERPILLAR INC.

THE INFORMATION HEREIN IS THE PROPERTY OF CATERPILLAR INC. AND/OR ITS SUBSIDIARIES AND MAY BE PROTECTED BY PATENTS, COPYRIGHTS, TRADE SECRETS, AND OR OTHER INTELLECTUAL PROPERTY RIGHTS. NO USE OR DISCLOSURE WITHOUT WRITTEN PERMISSION OF CATERPILLAR INC. IS PROHIBITED.

INSTALLATION-ENGINE
PACKAGE GENERATOR SET

277-8059 | LTR – | REV-PA SUB | CONTROL W971 | E